Grove Manitowoc National Crane Potain

Grove RT880E

Product Guide

Features

- 75 t (80 USt) capacity
- 12,6 m - 39,0 m (41 ft - 128 ft) four-section, full power boom
- 10,0 m - 17,0 m (33 ft - 56 ft) offsettable lattice swingaway extension
- 6,1 m (20 ft) or 12,2 m (40 ft) extension inserts
- Grove MEGAFORM™ boom
- Cummins 205 kW (275 hp) Tier IVF, diesel engine
- 8165 kg (18,000 lb) hydraulic removable counterweight

Features

Boom

The 39,0 m (128 ft) four-section full power MEGAFORM™ boom eliminates weight and increases capacity compared to conventional boom shapes.

Removable counterweight

Counterweight and auxiliary hoist is hydraulically removed/installed for easier hauling from job to job.

Extensions

Maximum tip height of 70,6 m (232 ft) with 17,0 m (56 ft) bi-fold and two 6,1 m (20 ft) inserts.

CraneSTAR

CraneSTAR is an exclusive and innovative crane asset management system that helps improve your profitability and reduce costs by remotely monitoring critical crane data. Visit www.cranestar.com for more information.

Cab

For improved operator comfort and visibility of the boom load, the cab can be tilted up to 20°.

Contents

Specifications	4
Dimensions and weights	7
Working range	8
Load charts	9
Working range with inserts	11
Load chart with inserts	13
Load handling	15
Symbols glossary	16

Specifications

Superstructure

Boom

12,6 m - 39,0 m (41 ft - 128 ft) four-section, sequenced synchronized full power boom.
Maximum tip height: 41,9 m (138 ft).

Lattice extension

10,0 m - 17 m (33 ft - 56 ft) offsettable bi-fold lattice swingaway extension. Offsets 0˚, 20˚, and 40˚. Stows alongside base boom section.
Maximum tip height: 58,6 m (192 ft).

*Optional lattice extension inserts

(2) x 6,1 m (20 ft) lattice extension inserts. Installs between the boom nose and bi-fold extension, non-stowable.
Maximum tip height: 70,6 m (232 ft).

Boom nose

Four nylatron sheaves mounted on heavy-duty tapered roller bearings with removable pin-type rope guards. Quick-reeving type boom nose. Removable auxiliary boom nose with removable pin type rope guard.

Boom elevation

One double-acting hydraulic cylinder with integral holding valve provides elevation from -3° to +78°.

Load moment and anti-two block system

Standard "Graphic Display" load moment and anti-two block system with audio-visual warning and control lever lockout. These systems provide electronic display of boom angle, length, radius, tip height, relative load moment, maximum permissible load, load indication and warning of impending two-block condition. The standard Work Area Definition System allows the operator to pre-select and define safe working areas. If the crane approaches the pre-set limits, audio-visual warnings aid the operator in avoiding job-site obstructions.

Cab

20° tilt, Full-vision, all-steel fabricated with acoustical lining and tinted safety glass throughout. Deluxe seat incorporates single-axis hydraulic controllers. Tilt/telecoping steering wheel with various controls incorporated into the steering column. Other standard features include:, hot water heater, cab circulating air fan, sliding side and rear windows, sliding skylight with electric wiper and sunscreen, electric windshield wash/wipe, fire extinguisher, seat belt, air conditioning, and dual cab mounted work light.

Swing

Two speed, planetary swing drive with foot-applied multi-disc wet brake. Spring applied, hydraulically-released swing brake. Single position mechanical house lock, operated from cab. Maximum speed: 2.0 rpm.

Counterweight

8165 kg (18,000 lb). Hydraulically installed and removed.

Hoist specifications (HP30-18G) Main and auxiliary hoist

Planetary reduction with automatic spring applied multi-disc wet brake. Electronic hoist drum rotation indicators and hoist drum cable followers.
Maximum single line pull:
1st layers: 9185 kg (20,250 lb)
3rd layer: 7715 kg (17,010 lb)
5th layer: 6650 kg (14,660 lb)

Maximum permissible line pull:
7620 kg (16,800 lb) with 35 x 7 class rope

Maximum single line speed: 156 m/min (514 fpm)

Rope construction:
35 x 7 Rotation Resistant

Rope diameter: 19 mm (3/4 in)

Rope length:
Main hoist: 182,8 m (600 ft)
Auxiliary hoist: 182,8 m (600 ft)

Maximum rope stowage: 256 m (841 ft)

Denotes optional equipment

Specifications

Carrier

Chassis

Box section frame fabricated from high-strength, low alloy steel. Front/rear towing, lifting, and tie down lugs.

Outrigger system

Four hydraulic telescoping single-stage double box beam outriggers with inverted jacks and integral holding valves. Three position setting, 0%, 50% and fully extended. All steel fabricated, quick-release type round outrigger floats, 775 mm (30.5 in) diameter. Maximum outrigger pad load: 56 700 kg (125,000 lb). Outrigger monitoring system comes standard.

Outrigger controls

Controls and crane level indicator located in cab.

Engine (Tier IVF)

Cummins QSB 6.7L diesel, six-cylinder, turbo-charged. 205 kW (275 bhp) at 2500 rpm.

Meets emission requirements per U.S. E.P.A., Tier IV Final and E.U. Stage IV.

Maximum torque: 987 Nm (728 ft lb) at 1500 rpm.

Fuel requirement: Minimum of 15 ppm sulphur content (Ultra Low Sulphur Diesel and Diesel Exhaust Fluid (DEF)).

Note: Tier IVF engine required in North American, Canada, and European Union countries

Engine (Tier III)

Cummins QSB 6.7L diesel, six cylinders, 205 kW (275 bhp) (Gross) at 2500 rpm.
Maximum torque: 987 Nm (728 ft lb) at 1500 rpm.
Note: Required for sale outside of North American and European Union countries.

Fuel tank capacity

274 L (72 gal) - draw volume.

Transmission

Full rangeshift with 6 forward and 6 reverse speeds. Front axle disconnect for 4 x 2 travel.

Hydraulic system

Two main pumps ([1] piston and [1] gear) with a combined capacity of 503 LPM (133 GPM).
Maximum operating pressure: 277,7 bar (4000 psi).
Three section pressure compensated valve bank. Return line type filter with full flow by-pass protection and service indicator. Replaceable cartridge with micron filtration rating of 5/12/16. 959 L
(253 gal) hydraulic reservoir. Carrier mounted oil cooler with thermostatically controlled hydraulic motor driven fan/air to oil. System pressure test ports.

Electrical system

Three 12-V maintenance free batteries. 12-V starting and lighting. Battery disconnect. CanBus Diagnostic system.

Drive

4 x 4

Steering

Fully independent power steering:
Front: Full hydraulic, steering wheel controlled.
Rear: Full hydraulic, switch controlled.
Provides infinite variations of 4 main steering modes: front only, rear only, crab and coordinated.
Rear steer indicator.
Turning radius - 25 ft.

Axles

Front: Drive/steer with differential and planetary reduction hubs rigid-mounted to frame.
Rear: Drive/steer with differential and planetary reduction hubs pivot-mounted to frame.

Oscillation lockouts

Automatic full hydraulic lockouts on rear axle permits 25,4 cm (10 in) oscillation only with boom centered over the front.

**Denotes optional equipment*

Specifications

Carrier continued

Brakes

Full hydraulic split circuit brakes operating on all wheels. Spring-applied, hydraulically released parking brake mounted on front axle.

Tires

Std. 29.5 x 25 - 34 bias ply.

Lights

Full lighting including turn indicators, head, tail, brake and hazard warning lights.

Maximum speed

32 kph (20 mph)

Gradeability (theoretical)

75% (Based on 49 911 kg [110,032 lb] G.V.W) 29.5 x 25 tires, 39,0 m (128 ft) boom, plus 17,0 m (56 ft) swingaway, 8165 kg (18,000 lb) counterweight, 80 USt hook block and 10 Ust headache ball).

Miscellaneous standard equipment

Full width steel fenders, full length aluminum decking, dual rear view mirrors, hook block tiedown, electronic back-up alarm, light package, front stowage well, tachometer/hourmeter, rear wheel position indicator, 36,000 BTU hot water cab heater, air conditioning, hoist mirrors, engine distress A/V warning system, front/rear lift tie down lugs, coolant sight level indicator, CraneSTAR asset management system.

*Optional equipment

- **Auxiliary Lighting and Convenience Package:** Includes superstructure mounted amber flashing light, dual base boom mounted floodlights, in-cab LMI light bar, and rubber mat for stowage trough.
- **Value Package:** Includes manual offsettable bi-fold, 360° swing lock, and auxiliary hoist package
- **Auxiliary Hoist Package:** Includes auxiliary hoist with electronic drum rotation indicator, cable follower, 185 m (607 ft) wire rope and hoist mirror.
- 360° NYC style mechanical swinglock
- Rear Pintle hook
- Cab controlled cross axle differential locks, (front and rear)
- Event recorder
- Third wrap indicator for main hoist or main and auxiliary hoist
- Wireless windspeed
- C.E. Mark conformance
- 29C/-20F Cold weather package
- 40C/-40F Artic weather package
- Spare tire/wheel

**Denotes optional equipment*

Dimensions and weights

Dimensions

Tire size	A	B	C	D	E	F	G	A	B	C	D	E	F	G
29.5 X 25	16.6 m (54.5')	17.2 m (56.4')	13.6 m (44.7')	12.9 m (42.4')	12.5 m (41.0')	12.5 m (33.2')	8.8 m (28.8')	11.1 m (36.5')	11.6 m (38.1')	8.4 m (28.0')	7.8 m (25.7')	7.3 m (24.0')	4.9 m (16.2')	4.1 m (13.5')
	2 Wheel Steer							4 Wheel Steer						

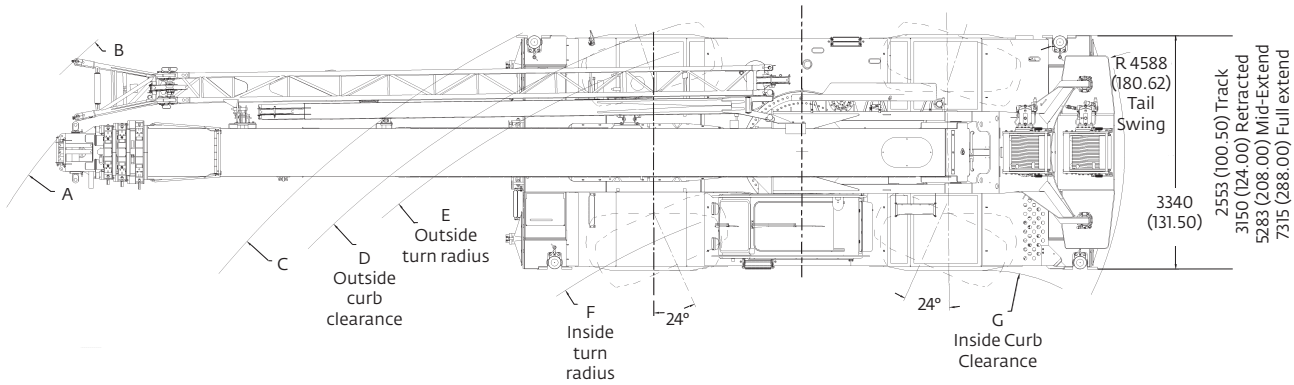

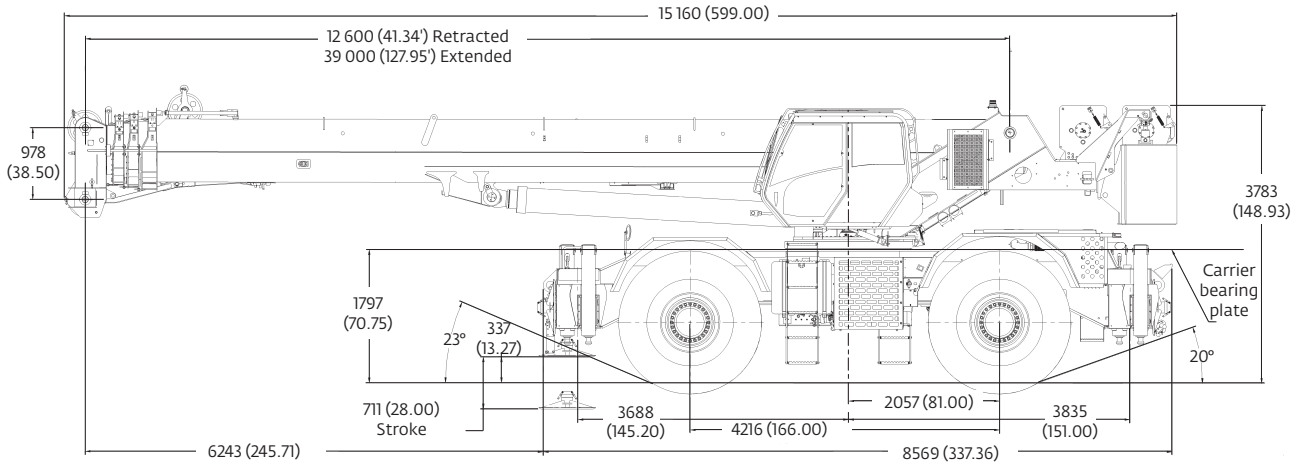

All dimensions are in mm (in)

Weights

	G.V.W.		Front		Rear	
	kg	lb	kg	lb	kg	lb
Basic Machine: Including 39, 0 m (128 ft) main boom, main and aux. hoist with 182,8 m (600 ft) of rope, manual offsettable bifold swingaway, full counterweight, 9,1 t (10 USt) headache ball, and 75 t (80 USt) hook block, air conditioning, aux. nose:	**49 911**	**110,032**	**24 567**	**54,160**	**25 344**	**55,872**
Remove: Counterweight and aux. hoist (manual offsettable S/A)	9 160	20,193	4 375	9,646	13 435	29,839
Crane weight	**40 751**	**89,839**	**28 942**	**63,806**	**11 909**	**26,033**
Remove: Counterweight, aux. hoist, and manual offsettable S/A	1 200	2,645	2 158	4,758	958	2113
Crane Weight	**39 551**	**87,194**	**26 784**	**59,048**	**12 767**	**28,146**

Working range

Working range diagram with bi-fold extension

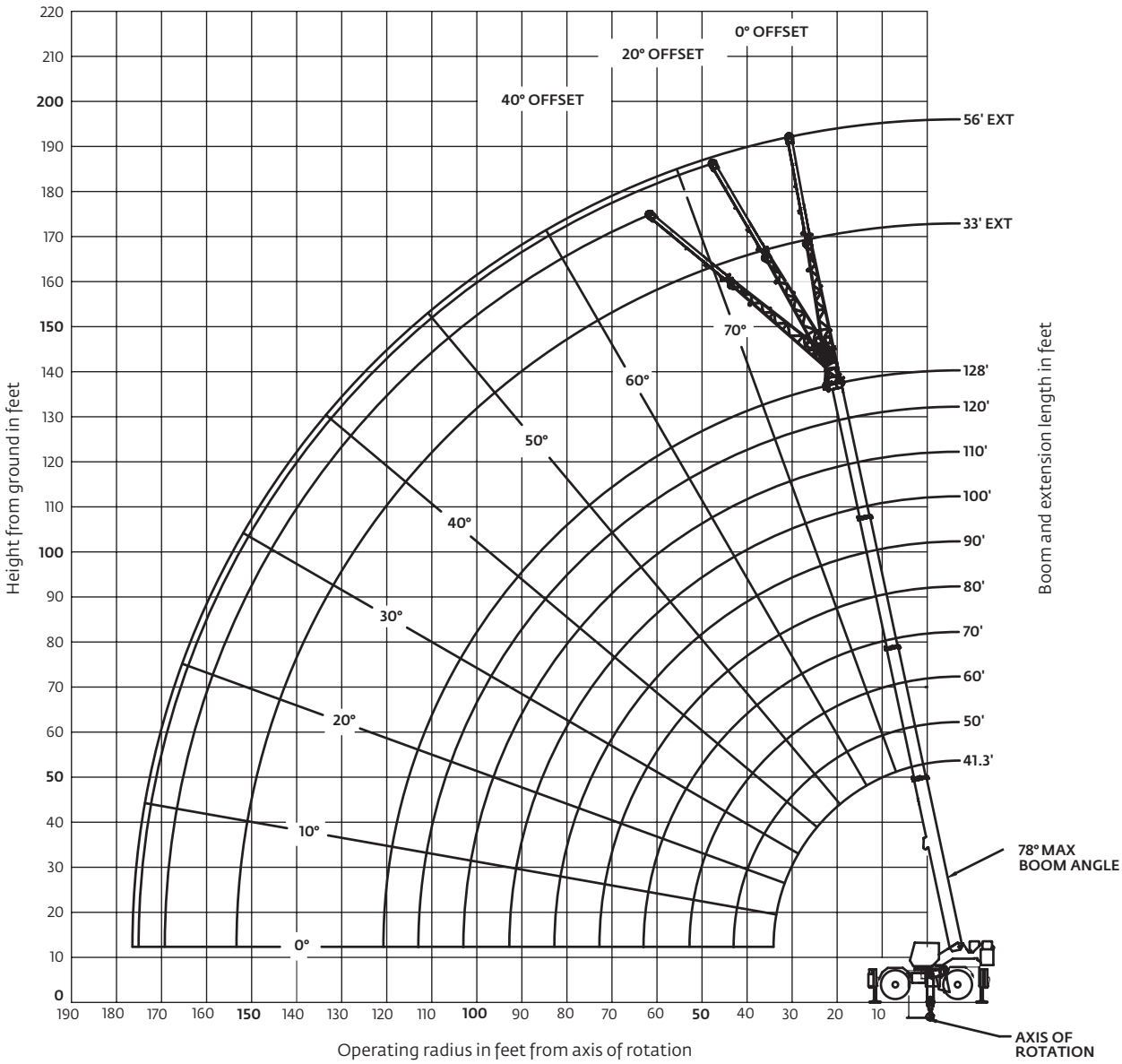

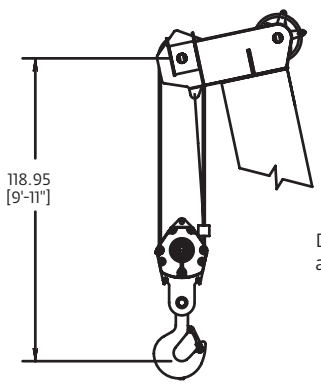

Dimensions are for largest Grove furnished hookblock and overhaul ball, with anti-two block activated.

THIS CHART IS ONLY A GUIDE AND SHOULD NOT BE USED TO OPERATE THE CRANE.
The individual crane's load chart, operating instructions and other instructional plates must be read and understood prior to operating the crane

RT880E load chart

41.3 ft - 128 ft | 18,000 lb | 100% 24 ft spread | 360°

Pounds

Feet	Main boom length in feet 41.3	50	60	**70	80	90	100	110	120	128
10	++160,000 (71)	124,000 (74.5)	105,500 (77.5)							
12	+150,000 (67.5)	124,000 (72)	105,500 (75.5)	59,500 (78)						
15	130,000 (63)	124,000 (68.5)	104,000 (72.5)	59,500 (75.5)	42,100 (78)	*42,000 (78)				
20	100,000 (54.5)	99,850 (62)	85,900 (67.5)	59,500 (71)	42,100 (74)	42,000 (76)	*39,650 (78)	*31,950 (78)		
25	80,550 (44.5)	80,250 (55)	72,550 (62)	57,050 (66.5)	42,100 (70)	42,000 (73)	39,650 (75)	31,950 (77)	*25,750 (78)	*22,000 (78)
30	59,050 (31.5)	58,150 (47)	57,850 (56)	49,300 (62)	42,100 (66)	39,050 (69.5)	36,150 (72)	31,950 (74)	25,750 (76)	22,000 (77)
35		43,250 (37.5)	43,000 (49.5)	42,600 (57)	38,150 (62)	34,100 (66)	31,350 (68.5)	29,300 (71.5)	25,750 (73.5)	22,000 (74.5)
40		33,600 (24.5)	33,400 (42.5)	32,950 (52)	33,750 (58)	30,050 (62)	27,500 (65.5)	25,650 (68.5)	23,900 (71)	22,000 (72.5)
45			26,600 (34)	26,200 (46)	27,400 (53)	26,750 (58.5)	24,400 (62)	22,700 (65.5)	21,450 (68)	20,650 (70)
50	See Note 16		21,600 (22)	21,150 (39.5)	22,450 (48.5)	23,250 (54.5)	21,850 (59)	20,250 (62.5)	19,100 (65.5)	18,350 (67.5)
55				17,250 (31.5)	18,650 (43)	19,400 (50)	19,700 (55)	18,200 (59.5)	17,100 (63)	16,400 (65)
60				14,200 (21)	15,600 (37)	16,400 (45.5)	17,050 (51.5)	16,450 (56)	15,450 (60)	14,750 (62.5)
65					13,100 (29.5)	13,850 (40.5)	14,550 (47.5)	14,950 (53)	14,000 (57)	13,350 (59.5)
70					11,050 (19)	11,800 (34.5)	12,450 (43)	12,900 (49.5)	12,700 (54)	12,150 (57)
75						10,000 (28)	10,700 (38.5)	11,200 (45.5)	11,600 (51)	11,050 (54)
80						8540 (18)	9170 (33)	9670 (41.5)	10,150 (47.5)	10,100 (51)
85							7860 (26.5)	8360 (37)	8850 (44)	9180 (48)
90							6710 (17.5)	7210 (32)	7700 (40)	8050 (44.5)
95								6200 (25.5)	6700 (35.5)	7050 (41)
100								5310 (17)	5800 (30.5)	6160 (37)
105									5010 (25)	5360 (32.5)
110									4290 (16.5)	4640 (27.5)
115										4000 (21.5)
120										3410 (10.5)
Minimum boom angle (°) for indicated length (no load)										9
Maximum boom length (ft) at 0° boom angle (no load)										120

#LMI operating code. Refer to LMI manual for instructions.
*This capacity is based upon maximum obtainable boom angle.
Note: ( ) Boom angles are in degrees.
+9 parts line required to lift this capacity (using aux. boom nose). Refer to Operator's & Safety Handbook for reeving diagram.
++ 10 parts line required to lift this capacity (using aux. boom nose). Refer to Operator's & Safety Handbook for reeving diagram.

Lifting capacities at zero degree boom angle

Boom angle	Main boom length in feet 41.3	50	60	**70	80	90	100	110	120
0°	20,750 (34.1)	15,150 (42.8)	10,500 (52.8)	6700 (63)	5100 (72.8)	3900 (82.8)	2900 (92.8)	2000 (102.8)	1300 (112.8)

Note: ( ) Reference radii in feet.
**This boom length is with inner-mid fully extended and outer-mid & fly fully retracted.

80001982

NOTES:

1. All capacities above the bold line are based on structural strength of boom extension and do not exceed 85% of tipping loads, in accordance with SAE J-765.
2. The 33 ft extension length may be used with single or double part line lifting service. The 56 ft extension length may be used for single line lifting service only.
3. For main boom lengths less than 128 ft with the boom extension erected, the rated loads are determined by boom angle. Use only the column which corresponds to the boom extension length and offset for which the machine is set up. For boom angles not shown, use the rating of the next lower boom angle.
4. **WARNING:** Operation of this machine with heavier loads than the capacities listed is strictly prohibited. Machine tipping with boom extension occurs rapidly and without advance warning.
5. Boom angle is the angle above or below horizontal of the longitudinal axis of the boom base section after lifting rated load.
6. Capacities listed are with outriggers properly extended and vertical jacks set only.
7. When lifting over the main boom nose with 33 ft or 56 ft extension erected, the outriggers must be fully extended or 50% extended (17 ft 4 in spread).

THIS CHART IS ONLY A GUIDE AND SHOULD NOT BE USED TO OPERATE THE CRANE.
The individual crane's load chart, operating instructions and other instructional plates must be read and understood prior to operating the crane

RT880E load chart

41.3 ft - 128 ft	33 ft - 56 ft	18,000 lb	100% 24 ft spread	360°

Pounds

Feet	33 ft LENGTH 0° OFFSET #0021	33 ft LENGTH 20° OFFSET #0022	33 ft LENGTH 40° OFFSET #0023	56 ft LENGTH 0° OFFSET #0041	56 ft LENGTH 20° OFFSET #0042	56 ft LENGTH 40° OFFSET #0043
35	11,900 (78)					
40	11,900 (77)			6060 (78)		
45	11,900 (75.5)	*11,900 (78)		6060 (77.5)		
50	11,900 (73.5)	10,600 (76.5)	*9790 (78)	6060 (76)		
55	11,900 (71.5)	9770 (74.5)	8470 (77)	6060 (74.5)		
60	11,000 (69.5)	9020 (72.5)	7920 (75)	6060 (72.5)	*6060 (78)	
65	10,000 (67.5)	8360 (70.5)	7430 (73)	6060 (71)	5900 (76.5)	
70	9190 (65.5)	7780 (68.5)	6980 (71)	6060 (69.5)	5730 (75)	*5060 (78)
75	8460 (63.5)	7260 (66.5)	6580 (69)	6060 (67.5)	5330 (73)	4640 (77)
80	7820 (61.5)	6790 (64.5)	6210 (66.5)	6040 (66)	4980 (71.5)	4370 (75.5)
85	7250 (59.5)	6370 (62)	5870 (64.5)	5570 (64)	4650 (69.5)	4120 (73.5)
90	6740 (57)	5990 (60)	5560 (62)	5150 (62.5)	4360 (67.5)	3890 (71.5)
95	6290 (55)	5640 (57.5)	5280 (60)	4780 (60.5)	4090 (66)	3680 (69.5)
100	5880 (52.5)	5320 (55.5)	5020 (57.5)	4440 (58.5)	3840 (64)	3480 (67.5)
105	5510 (50)	5030 (53)	4770 (55)	4130 (56.5)	3610 (62)	3300 (65.5)
110	5170 (47.5)	4760 (50.5)	4550 (52)	3850 (54.5)	3400 (60)	3130 (63.5)
115	4830 (45)	4510 (47.5)	4340 (49.5)	3590 (52.5)	3200 (58)	2970 (61)
120	4230 (42)	4280 (45)	4150 (46.5)	3360 (50.5)	3020 (55.5)	2820 (59)
125	3690 (39)	3960 (41.5)		3140 (48)	2840 (53.5)	2680 (56.5)
130	3200 (36)	3430 (38.5)		2940 (46)	2690 (51)	2540 (54)
135	2740 (32)	2930 (35)		2760 (43.5)	2540 (48.5)	2420 (51.5)
140	2320 (28)	2480 (30.5)		2590 (41)	2400 (46)	2300 (48.5)
145	1940 (23)			2430 (38.5)	2270 (43.5)	
150	1580 (16.5)			2070 (35.5)	2140 (40.5)	
155				1730 (32.5)	2030 (37)	
160				1420 (29)	1710 (33.5)	
165				1120 (24.5)		
Minimum boom angle (°) for indicated length (no load)	15	28	44	23	31	46
Maximum boom length (ft) at 0° boom angle (no load)		110			110	

NOTE: ( ) Boom angles are in degrees.
#LMI operating code. Refer to LMI manual for operating instructions.
*This capacity is based upon maximum boom angle.

A6-829-103653

NOTES:

1. All capacities above the bold line are based on structural strength of boom extension and do not exceed 85% of tipping loads, in accordance with SAE J-765.
2. The 33 ft extension length may be used with single or double part line lifting service. The 56 ft extension length may be used for single line lifting service only.
3. For main boom lengths less than 128 ft with the boom extension erected, the rated loads are determined by boom angle. Use only the column which corresponds to the boom extension length and offset for which the machine is set up. For boom angles not shown, use the rating of the next lower boom angle.
4. **WARNING:** Operation of this machine with heavier loads than the capacities listed is strictly prohibited. Machine tipping with boom extension occurs rapidly and without advance warning.
5. Boom angle is the angle above or below horizontal of the longitudinal axis of the boom base section after lifting rated load.
6. Capacities listed are with outriggers properly extended and vertical jacks set only.
7. When lifting over the main boom nose with 33 ft or 56 ft extension erected, the outriggers must be fully extended or 50% extended (17 ft 4 in spread).

THIS CHART IS ONLY A GUIDE AND SHOULD NOT BE USED TO OPERATE THE CRANE.
The individual crane's load chart, operating instructions and other instructional plates must be read and understood prior to operating the crane.

Working range

Working range diagram with bi-fold extension and one insert

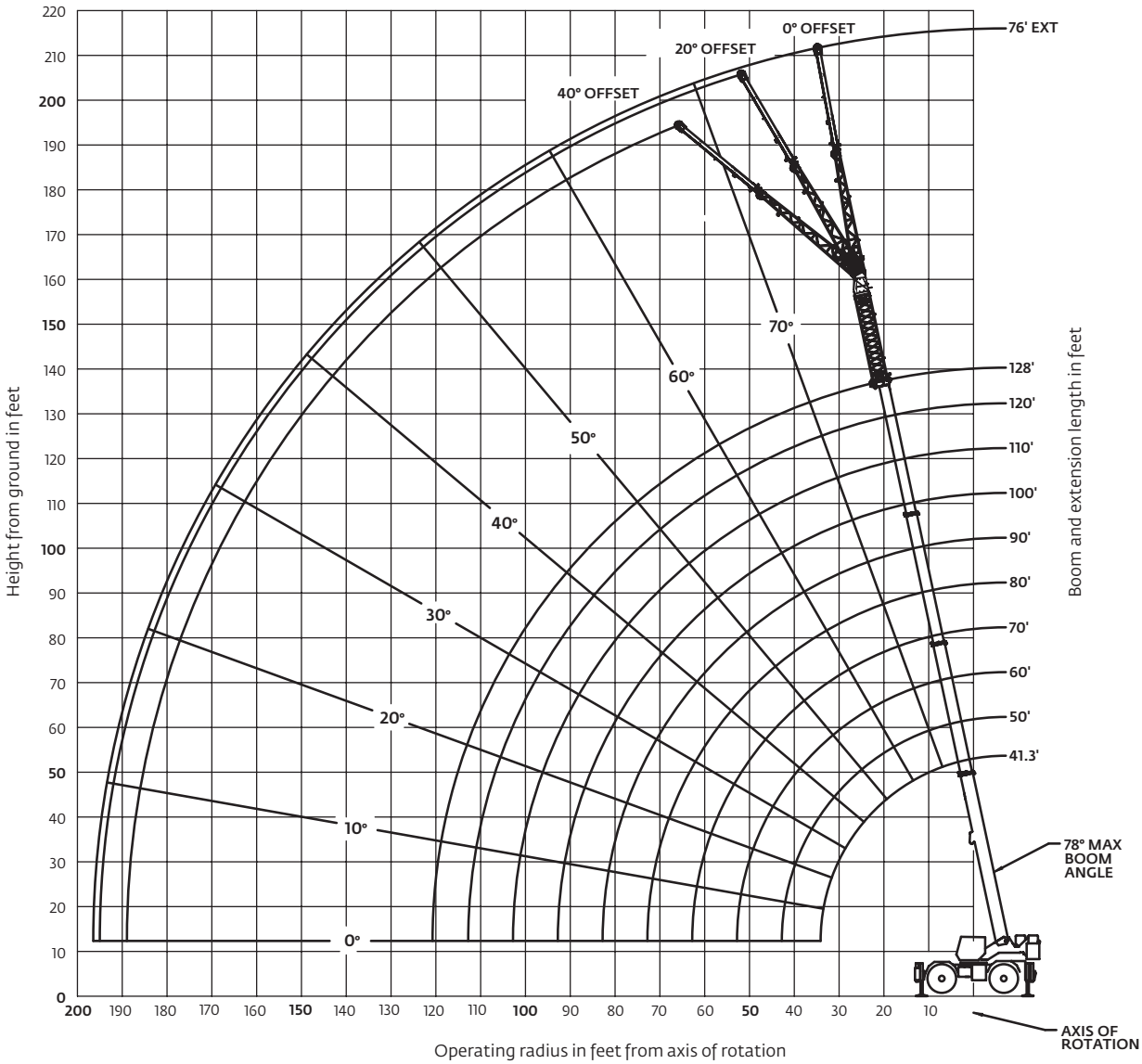

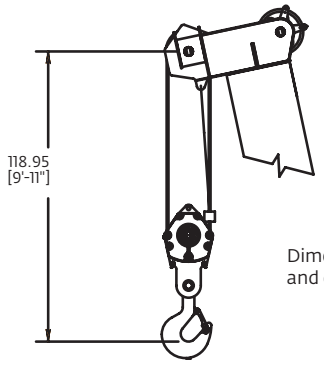

Dimensions are for largest Grove furnished hookblock and overhaul ball, with anti-two block activated.

THIS CHART IS ONLY A GUIDE AND SHOULD NOT BE USED TO OPERATE THE CRANE.
The individual crane's load chart, operating instructions and other instructional plates must be read and understood prior to operating the crane

Working range

Working range diagram with bi-fold extension and two inserts

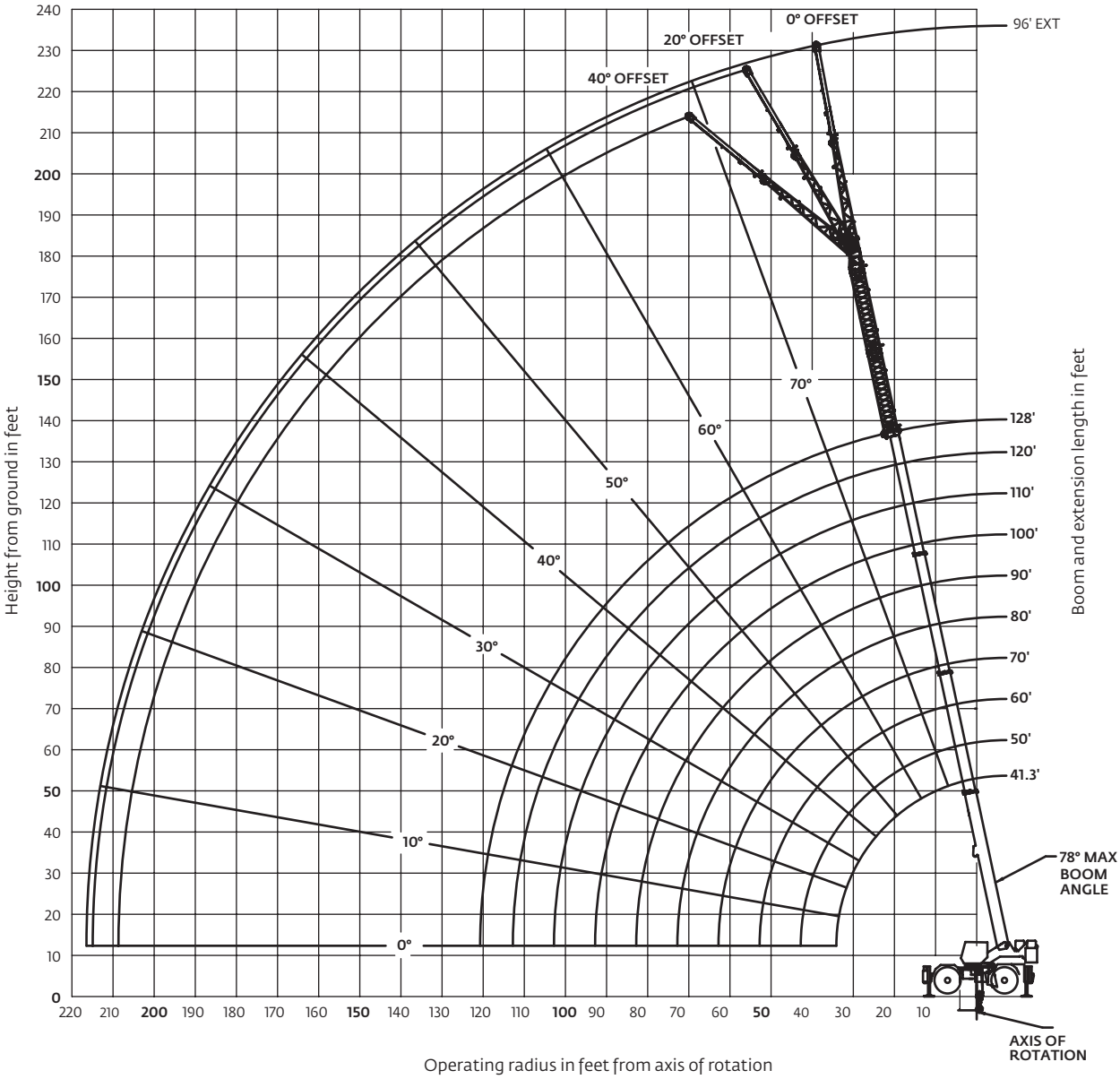

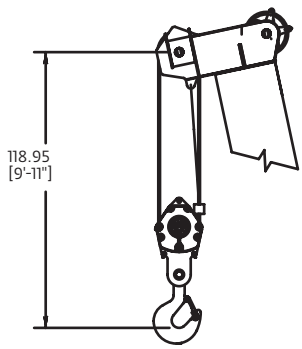

Dimensions are for largest Grove furnished hookblock and overhaul ball, with anti-two block activated.

THIS CHART IS ONLY A GUIDE AND SHOULD NOT BE USED TO OPERATE THE CRANE.
The individual crane's load chart, operating instructions and other instructional plates must be read and understood prior to operating the crane.

RT880E load chart

41.3 - 128 ft | 33 - 56 ft | 20 ft insert | 18,000 lb | 100% 24 ft spread | 360°

Pounds

Feet	76 ft (56 ft LENGTH + 1 INSERT) 0° OFFSET #0084	20° OFFSET #0085	40° OFFSET #0086	96 ft (56 ft LENGTH + 2 INSERTS) 0° OFFSET #0084	20° OFFSET #0085	40° OFFSET #0086
50	4850 (78)					
55	4850 (77.5)			3520 (78)		
60	4850 (76)			3520 (77.5)		
65	4850 (74.5)	*5290 (78)		3520 (76.5)		
70	4850 (73)	4860 (77.5)		3520 (75)		
75	4850 (71.5)	4470 (76)		3520 (73.5)	3740 (78)	
80	4730 (70)	4110 (74.5)	*4050 (78)	3520 (72.5)	3420 (76.5)	
85	4310 (68.5)	3790 (73)	3500 (76.5)	3300 (71)	3100 (75)	*3250 (78)
90	3940 (67)	3500 (71)	3260 (75)	2970 (69.5)	2820 (73.5)	2720 (77)
95	3610 (65.5)	3240 (69.5)	3030 (73)	2660 (68)	2560 (72)	2490 (75.5)
100	3310 (64)	3000 (68)	2830 (71.5)	2390 (66.5)	2320 (71)	2270 (74)
105	3040 (62)	2770 (66)	2630 (69.5)	2140 (65)	2100 (69.5)	2070 (72)
110	2790 (60.5)	2570 (64.5)	2450 (68)	1920 (63.5)	1900 (68)	1890 (70.5)
115	2560 (58.5)	2370 (62.5)	2280 (66)	1710 (62)	1710 (66.5)	1710 (69)
120	2350 (57)	2200 (61)	2120 (64)	1520 (60.5)	1540 (64.5)	1550 (67.5)
125	2160 (55)	2030 (59)	1970 (62)	1350 (59)	1380 (63)	1390 (66)
130	1990 (53)	1880 (57)	1830 (60)	1190 (57.5)	1230 (61.5)	1250 (64)
135	1820 (51.5)	1730 (55)	1700 (58)	1040 (56)	1080 (60)	1110 (62.5)
140	1670 (49.5)	1590 (53)	1570 (56)			
145	1530 (47)	1470 (51)	1450 (53.5)			
150	1400 (45)	1340 (49)	1340 (51.5)			
155	1270 (43)	1230 (46.5)	1230 (48.5)			
160	1160 (40.5)	1120 (44)	1130 (46)			
165	1050 (38)	1020 (41.5)				
Minimum boom angle (°) for indicated length (no load)	36	40	44	54	58	60
Maximum boom length (ft) at 0° boom angle (no load)		70			60	

NOTE: ( ) Boom angles are in degrees. A6-829-103655
#LMI operating code. Refer to LMI manual for operating instructions.
*This capacity is based upon maximum boom angle.
RT875E - S/N 223983

NOTES:

1. All capacities above the bold line are based on structural strength of boom extension and do not exceed 85% of tipping loads, in accordance with SAE J-765.
2. The 56 ft boom extension length may be used for single line lifting service only.
3. For main boom lengths less than 128 ft with the boom extension erected, the rated loads are determined by boom angle. Use only the column which corresponds to the boom extension length and offset for which the machine is set up. For boom angles not shown, use rating of the next lower boom angle.
4. **WARNING:** Operation of this machine with heavier loads than the capacities listed is strictly prohibited. Machine tipping with boom extension occurs rapidly and without advance warning.
5. Boom angle is the angle above or below horizontal of the longitudinal axis of the boom base section after lifting rated load.
6. When lifting over the main boom nose with 56 ft extension erected and inserts, the outriggers must be fully extended and vertical jacks set.

THIS CHART IS ONLY A GUIDE AND SHOULD NOT BE USED TO OPERATE THE CRANE.
The individual crane's load chart, operating instructions and other instructional plates must be read and understood prior to operating the crane.

RT880E load charts

41.3 ft - 90 ft | 18,000 lb | Stationary | 360°

Pounds

#9005

Feet	Main boom length in feet 41.3	50	60	*70	80	90
12	49,200 (67.5)	40,750 (72)				
15	39,150 (63)	35,700 (68.5)				
20	24,200 (54.5)	24,350 (62)	22,800 (67.5)	22,000 (71)		
25	16,200 (44.5)	16,200 (55)	15,600 (62)	15,950 (66.5)	15,850 (70)	
30	11,250 (31.5)	11,250 (47)	10,950 (56)	10,650 (62)	11,600 (66)	12,150 (69.5)
35		7900 (37.5)	7690 (49.5)	7270 (57)	8420 (62)	8820 (66)
40		5490 (24.5)	5280 (42.5)	4880 (52)	6020 (58)	6330 (62)
45			3430 (34)	3110 (46)	4130 (53)	4480 (58.5)
50			1350 (22)	1740 (39.5)	2610 (48.5)	3040 (54.5)
55					1360 (43)	1070 (50)
Minimum boom angle (°) for indicated length (no load)			21	38.5	42	49
Maximum boom length (ft) at 0° boom angle (no load)				50		

#LMI operating code. Refer to LMI manual for instructions.
Note: ( ) Boom angles are in degrees.
*This boom length is with inner-mid fully extended and outer-mid and fly fully retracted.

Lifting capacities at zero degree boom angle

Boom angle	Main boom length in feet 41.3	50
0°	8340 (34.1)	4400 (42.8)

Note: ( ) Reference radii in feet. A6-829-0103649A

41.3 ft - 90 ft | 18,000 lb | Pick & carry Up to 2.5 mph | Boom centered over front

Pounds

#9006

Feet	Main boom length in feet 41.3	50	60	*70	80	90
12	59,450 (67.5)	49,400 (72)				
15	49,650 (63)	49,400 (68.5)				
20	38,100 (54.5)	37,800 (62)	36,850 (67.5)	29,750 (71)		
25	30,000 (44.5)	29,700 (55)	29,200 (62)	29,700 (66.5)		
30	24,100 (31.5)	23,750 (47)	23,500 (56)	23,850 (62)	24,450 (66)	
35		18,000 (37.5)	17,900 (49.5)	18,150 (57)	19,000 (62)	19,900 (66)
40		13,650 (24.5)	13,700 (42.5)	13,750 (52)	14,700 (58)	15,500 (62)
45			9400 (34)	9290 (46)	11,500 (53)	12,300 (58.5)
50			7420 (22)	7200 (39.5)	8220 (48.5)	8960 (54.5)
55				5450 (31.5)	6510 (43)	7220 (50)
60				3970 (21)	5060 (37)	5740 (45.5)
65					3810 (29.5)	4460 (40.5)
70					2720 (19)	3350 (34.5)
75						2380 (28)
80						1520 (18)
Minimum boom angle (°) for indicated length (no load)						0
Maximum boom length (ft) at 0° boom angle (no load)						90

#LMI operating code. Refer to LMI manual for instructions.
Note: ( ) Boom angles are in degrees.

Lifting capacities at zero degree boom angle

Boom angle	Main boom length in feet 41.3	50	60	*70	80	90
0°	19,400 (34.1)	10,250 (42.8)	6460 (52.8)	3170 (63)	2170 (72.8)	1080 (82.8)

Note: ( ) Reference radii in feet. A6-829-0103650
*This boom length is with inner-mid fully extended and outer-mid and fly fully retracted.

NOTES:

1. Capacities are in pounds and do not exceed 75% of tipping loads as determined by test in accordance with SAE J765.
2. Capacities are applicable to machines equipped with 29.6 x 25 (34 ply) General tires at 76 psi cold inflation pressure.
3. Capacities appearing above the bold line are based on structural strength and tipping should not be relied upon as a capacity limitation.
4. Capacities are applicable only with machine on firm level surface.
5. On rubber lifting with boom extensions not permitted.
6. For pick and carry operation, boom must be centered over front of machine, mechanical swing lock engaged and load restrained from swinging. When handling loads in the structural range with capacities close to maximum ratings, travel should be reduced to creep speeds.
7. Axle lockouts must be functioning when lifting on rubber.
8. All lifting depends on proper tire inflation, capacity and condition. Capacities must be reduced for lower tire inflation pressures. See lifting capacity chart for tire used. Damaged tires are hazardous to safe operation of crane.
9. Creep – Not over 200 ft of movement in any 30 minute period and not exceeding 1 mph.

THIS CHART IS ONLY A GUIDE AND SHOULD NOT BE USED TO OPERATE THE CRANE.
The individual crane's load chart, operating instructions and other instructional plates must be read and understood prior to operating the crane.

Load handling

Weight reductions for load handling devices

33 ft - 56 ft FOLDING BOOM EXTENSION	
*33 ft Extension (Erected) -	3700 lb
*56 ft Extension (Erected) -	7830 lb
*76 ft (1 insert Erected) -	10,350 lb
*96 ft (2 inserts Erected) -	13,300 lb

*Reduction of main boom capacities
(no deduct required for stowed boom extension)

When lifting over swingaway and/or jib combinations, deduct total weight of all load handling devices reeved over main boom nose directly from swingaway or jib capacity.

AUXILIARY BOOM NOSE	136 lb
HOOK BLOCK AND OVERHAUL BALL:	
80 USt, 5 Sheave	1319 lb +
40 USt, 3 Sheave	1200 lb +
10 USt, Overhaul Ball	568 lb +

+ Refer to rating plate for actual weight.

NOTE: All load handling devices and boom attachments are considered part of the load and suitable allowances MUST BE MADE for their combined weights. Weights are for Grove furnished equipment.

Line pulls and reeving information

Hoists	Cable specs	Permissible line pulls	Nominal cable length
Main	19 mm (3/4 IN) 6x37 Class, EIPS, IWRC Special Flexible Min. Breaking Str. 58,800 lb	16,800 lb	600 ft
Main & Aux.	19 mm (3/4) Flex-X 35 Rotation Resistant (non-rotating) Min. Breaking Strength 85,800 lb.	16,800 lb	607 ft

The approximate weight of 3/4 in wire rope is 1.5 lb/ft

Boom section vs. section extension percentages

	Main boom length in feet									
	41.3	50	60	70	80	90	100	110	120	128
Boom sections:	Percent extension									
Inner-mid	0	30	65	100	100	100	100	100	100	100
Outer-mid	0	0	0	0	17	34	52	69	86	100
Fly	0	0	0	0	17	34	52	69	86	100

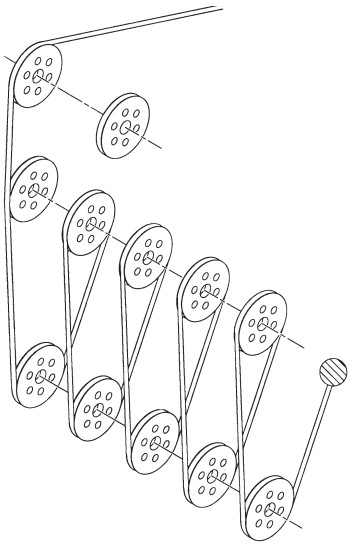

Hoist performance

Wire rope layer	Hoist line pulls Two speed hoist Low Available lb°	High Available lb°	Drum rope capacity (ft) 15 in drum Layer	Total
1	20,250	9610	101	101
2	18,490	8770	110	211
3	17,010	8070	120	331
4	15,750	7470	129	460
5	14,660	6960	139	599

*Max. lifting capacity: 6x37 or 35x7 class = 16,800 lb

Installation and removal of counterweight and auxiliary hoist

Rated lifting capacities in pounds on outriggers fully extended – 360°	
Radius in feet	LMI Code #0801 Main boom length 41.3 ft°
10	24,000
12	24,000
15	24,000
20	24,000
25	24,000
30	24,000

*The boom must be fully retracted.

Working area diagram

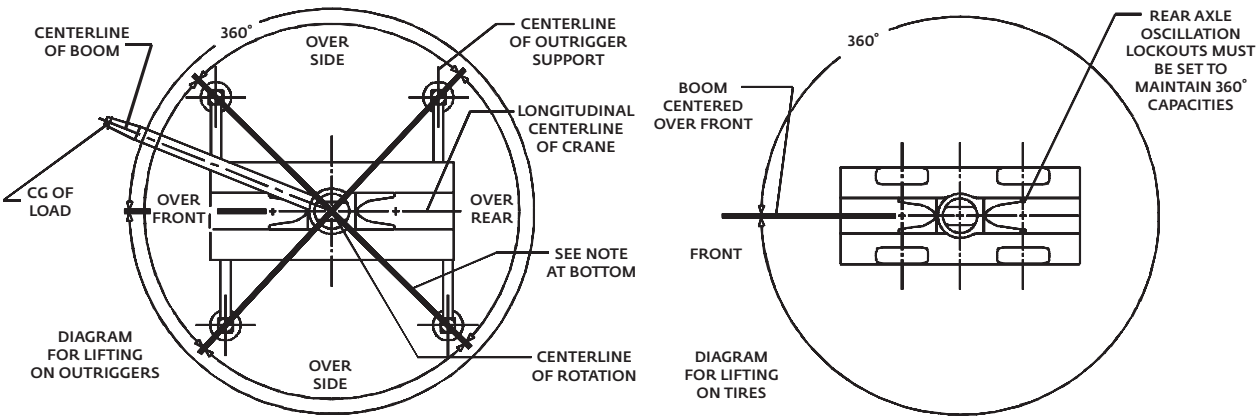

Bold lines determine the limiting position of any load for operation within working areas indicated.

THIS CHART IS ONLY A GUIDE AND SHOULD NOT BE USED TO OPERATE THE CRANE.
The individual crane's load chart, operating instructions and other instructional plates must be read and understood prior to operating the crane.

Symbols glossary

Axles

Boom

Boom elevation

Boom extension

Boom length

Boom nose

Brakes

Cab

Counterweight

Drive

Electrical system

Engine

Extension

Frame

Fuel tank capacity

Gear

Grade

Height (no max)

Heavy duty jib

Hoist

Hookblock

Hydraulic system

Lights

Oil

Outrigger controls

Outriggers

Radius

Rotation

Speed

Steering

Suspension

Swing

Tires

Transmission

Notes

Notes

Notes

Manitowoc Cranes

Regional headquarters

Americas
Manitowoc, Wisconsin, USA
Tel: +1 920 684 6621
Fax: +1 920 683 6277

Shady Grove, Pennsylvania, USA
Tel: +1 717 597 8121
Fax: +1 717 597 4062

Europe, Middle East, Africa
Ecully, France
Tel: +33 (0)4 72 18 20 20
Fax: +33 (0)4 72 18 20 00

China
Shanghai, China
Tel: +86 21 6457 0066
Fax: +86 21 6457 4955

Greater Asia-Pacific
Singapore
Tel: +65 6264 1188
Fax: +65 6862 4040

Regional offices

Americas
Brazil
Alphaville
Mexico
Monterrey
Chile
Santiago

Europe, Middle East, Africa
Czech Republic
Netvorice
France
Baudemont
Cergy
Decines
Germany
Langenfeld
Hungary
Budapest
Italy
Lainate
Netherlands
Breda
Poland
Warsaw
Portugal
Baltar
Russia
Moscow
U.A.E.
Dubai
U.K.
Buckingham

China
Beijing
Chengdu
Guangzhou
Xian

Greater Asia-Pacific
Australia
Adelaide
Brisbane
Melbourne
Sydney
India
Calcutta
Chennai
Delhi
Hyderabad
Pune
Korea
Seoul
Philippines
Makati City
Singapore

Factories

Brazil
Alphaville
China
TaiAn
Zhangjiagang
France
Charlieu
Moulins
Germany
Wilhelmshaven
India
Pune
Italy
Niella Tanaro
Portugal
Baltar
Fânzeres
Slovakia
Saris
USA
Manitowoc
Port Washington
Shady Grove

This document is non-contractual. Constant improvement and engineering progress make it necessary that we reserve the right to make specification, equipment, and price changes without notice. Illustrations shown may include optional equipment and accessories and may not include all standard equipment.

©2011 Manitowoc
Printed in USA
Form No. RT880E PG
Part No. 08-002-2M-1111